IMI BOPP & REUTHER

Si 4 Series

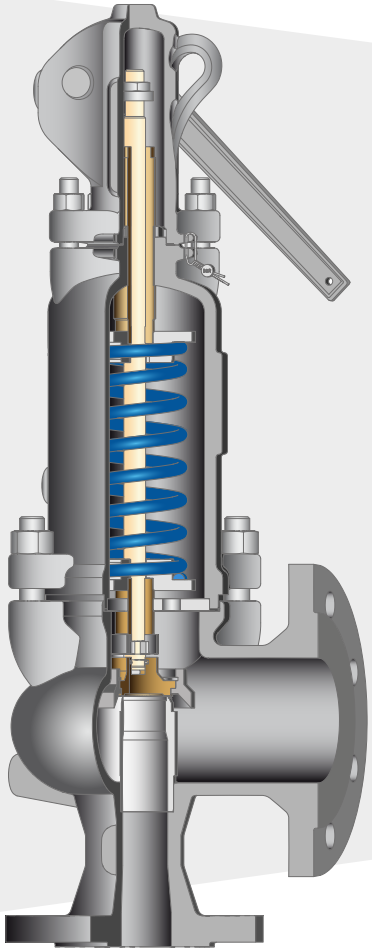

Engineering
GREAT Solutions

High Flow Safety Valve

DESIGN EVOLUTION

IMI Critical Engineering

Si 4 Series

State-of-the-art high capacity process safety valve for medium pressure with cost-effective semi-nozzle body design and seat bushing.

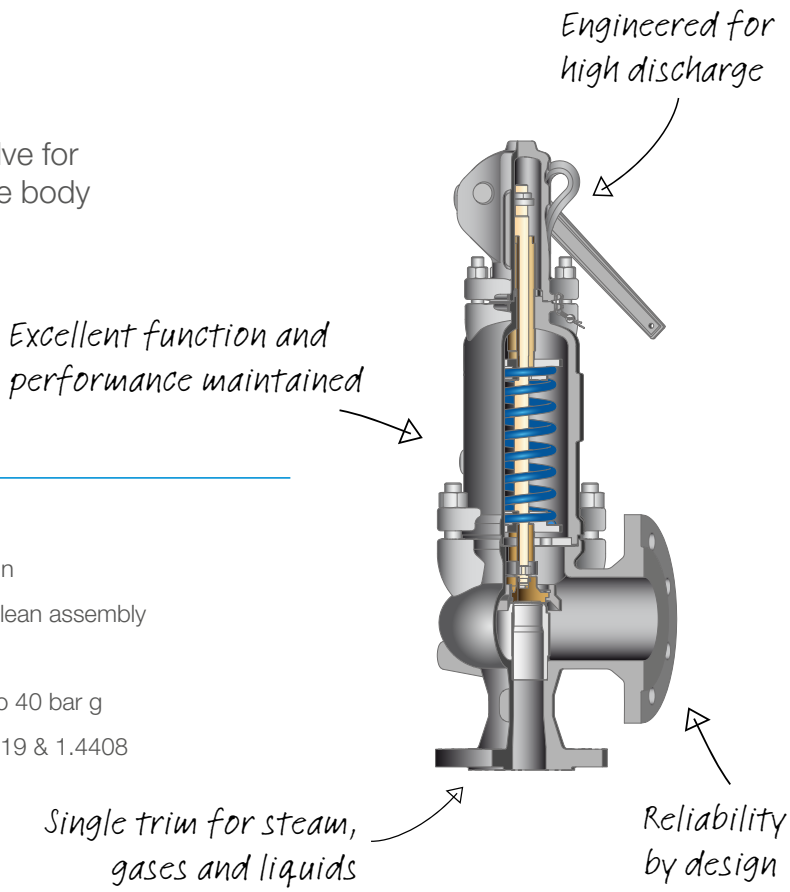

Key features

- > Streamlined design
- > Reduced weight
- > Simplified internals
- > Extended bonnet
- > Lifting lugs
- > Dedicated area for tag plates
- > Seat bushing is press fitted
- > Modular design
- > Optimised for lean assembly
- > DN 20 to 200
- > 0.1 bar g up to 40 bar g
- > Materials 1.0619 & 1.4408

Benefits

Developed as a modular design alongside other models, the new Si 4302-E1 provides reliable function with great capacity.

The inner parts are made of stainless steel.

On the extended bonnet, once the set screw is loosened there is no pre-loading force on the spring. The bonnet-flange bolts can now be removed easily.

Easy maintenance when dismanteling the valve for lapping of the seat and disc possible without change of set-pressure.

The bellows are in a safe location outside the flowpath to ensure extended lifetime.

For vapours, gases and liquids: typical applications are pressure vessels, heat exchangers and piping systems, such as those found in the chemical and petrochemical industries, as well as in power plant technology, steam generation, potable water pipelines and cryogenic gas rectification.

The new Si 4302-E1 flow capacity is identical to the previous Si 43 and exceeds the Si 6302 capacity. Center-to-face dimensions of entire valve generation are unchanged. Height and weight may vary slightly.

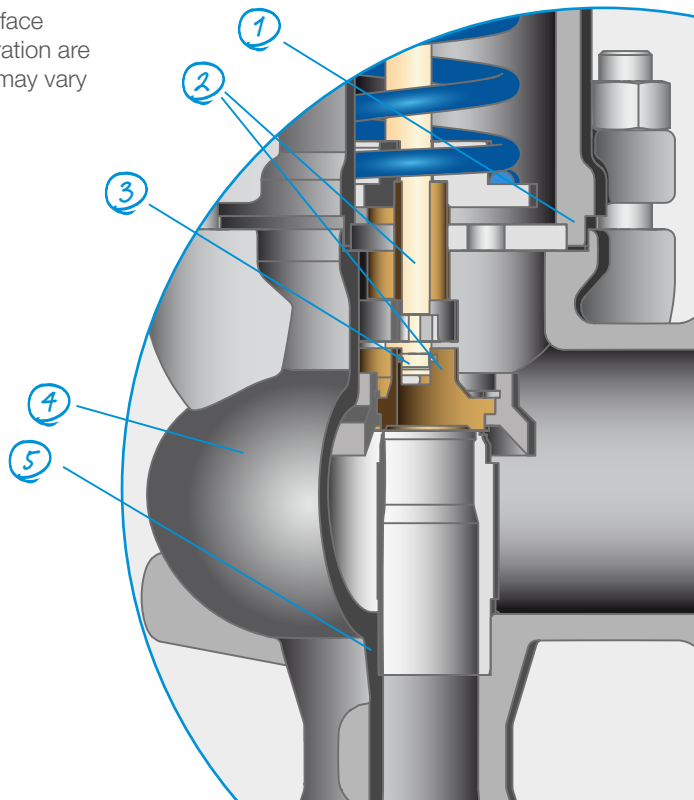

1. One body gasket only
2. New spindle disc, lift collar design, upgraded for easy and safe assembly
3. Easy assembly with circlip pliers
4. Body bonnet redesigned for quality improvements and lighter appearance
5. Body to seat bush interference fit

Product specifications

Sizes
DN 20 to DN 200

Set pressures
0.1 bar g up to 40 bar g

Materials
1.0619
1.4408

Product breakdown

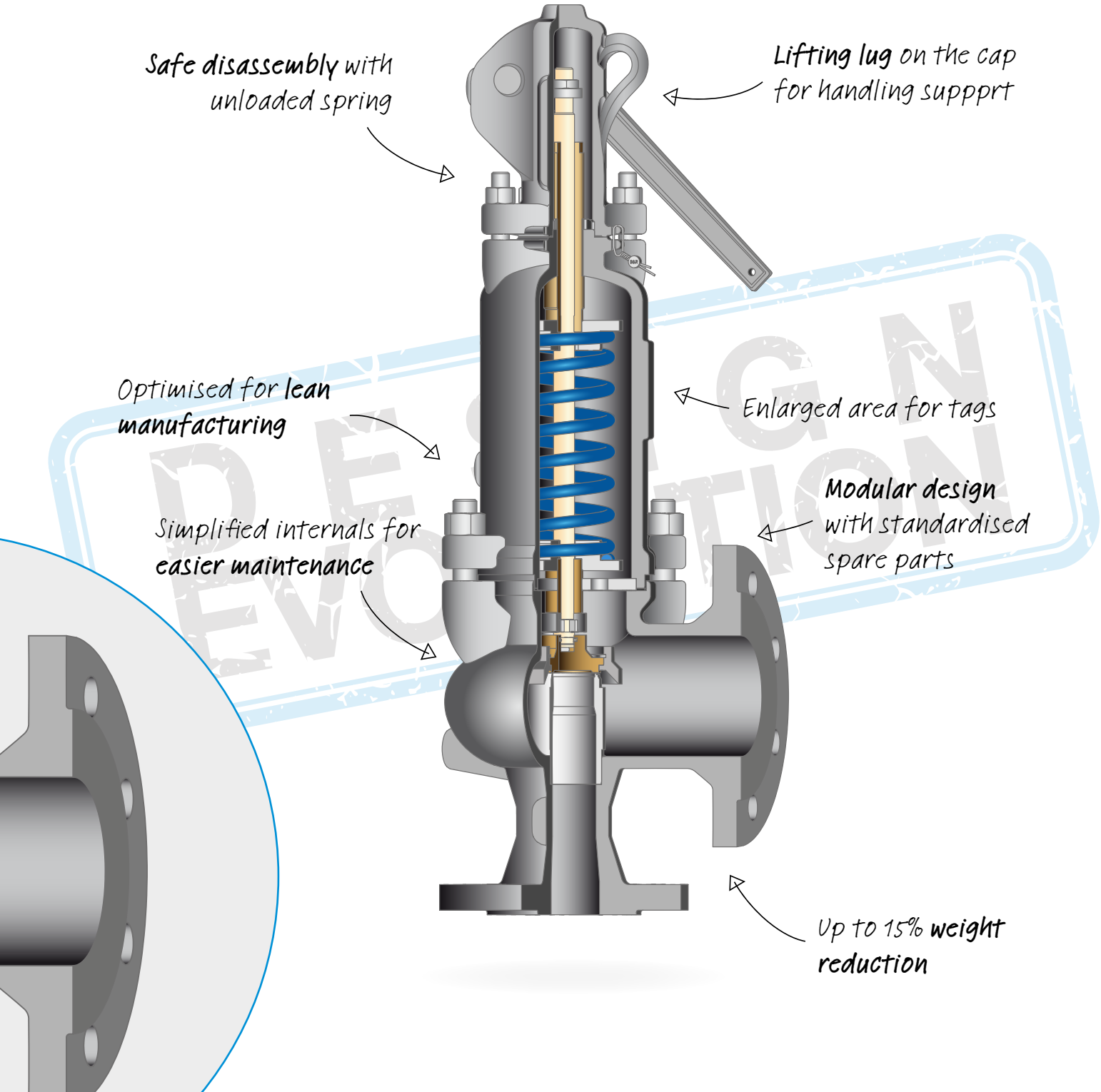

IMI Bopp and Reuther
Carl-Reuther-Straße 1
68305 Mannheim
Germany

Tel: +49 (0) 621 76220 - 0
Fax: +49 (0) 621 76220 - 400

imibr.sales@imi-critical.com

IMI Critical Engineering
Lakeside, Solihull Parkway
Birmingham Business Park
Birmingham B37 7XZ
United Kingdom

Tel: +44 (0)121 717 3700
Fax: +44 (0)121 717 3701

www.imi-critical.com

IMI
Critical Engineering

12004.01-18en